Engineering Specification

Job Name _____ Contractor _____

Job Location _____ Approval _____

Engineer _____ Contractor's P.O. No. _____

Approval _____ Representative _____

SI-770

Solids Interceptor

Specification

Watts SI-770 recessed or floor mounted epoxy coated steel solids interceptor with gasketed epoxy coated steel skid-proof cover secured with hex head center bolt(s), removable sediment basket, and no hub connection.

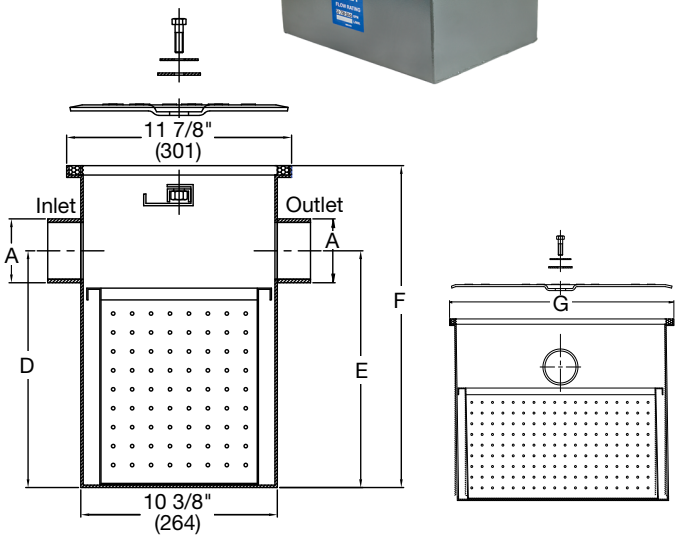

Flow Rate		
Suffix	Description	
100	4 GPM	☐
200	7 GPM	☐
300	10 GPM	☐
400	15 GPM	☐
500	20 GPM	☐
600	25 GPM	☐
700	35 GPM	☐
800	50 GPM	☐
900	75 GPM	☐
1000	100 GPM	☐

Options		
Suffix	Description	
-E	Extension	☐
-O	Inlet & Outlet (other than standard)	☐
-SS	Stainless Steel	☐
-THD	Threaded Connections	☐

Size	A Inlet/Outlet	Flow Rate GPM/(L)	Solids Cap Cubic Ft./(m³)	Dimensions in Inches		
				F	G	D/E
100	2"(51)	4(15)	0.20(.006)	10"(254)	11 3/4"(298)	7 1/4"(184)
200	2"(51)	7(26)	0.29(.008)	11 1/8"(283)	13 3/4"(349)	8 1/8"(206)
300	2"(51)	10(38)	0.33(.009)	11 3/4"(298)	15 7/8"(403)	8 1/4"(210)
400	3"(76)	15(57)	0.38(.011)	13 3/8"(340)	18 5/8"(473)	9 3/8"(238)
500	3"(76)	20(76)	0.66(.019)	15"(381)	19 1/8"(488)	11 3/4"(298)
600	3"(76)	25(95)	0.79(.022)	17"(432)	21 3/4"(552)	12 1/2"(318)
700	3"(76)	35(132)	1.17(.033)	18 3/4"(476)	24 3/8"(619)	14 1/4"(362)
800	4"(102)	50(189)	1.35(.038)	21 1/8"(546)	24 3/8"(619)	16"(406)
900	4"(102)	75(284)	1.61(.046)	22 3/4(578)	24 3/8"(619)	18 1/2"(470)
1000	4"(102)	100(379)	1.80(.051)	27"(686)	24 3/8"(619)	23"(584)

NOTICE

The information contained herein is not intended to replace the full product installation and safety information available or the experience of a trained product installer. You are required to thoroughly read all installation instructions and product safety information before beginning the installation of this product.

Watts product specifications in U.S. customary units and metric are approximate and are provided for reference only. For precise measurements, please contact Watts Technical Service. Watts reserves the right to change or modify product design, construction, specifications, or materials without prior notice and without incurring any obligation to make such changes and modifications on Watts products previously or subsequently sold.

USA: T: (800) 338-2581 • Watts.com
Canada: T: (888) 208-8927 • Watts.ca
Latin America: T: (52) 55-4122-0138 • Watts.com

© 2026 Watts